# Micro BGA

**BALL GRID ARRAY**

## Applicable IC/Micro BGA

# OPEN TOP TYPE SOCKETS

ORDERING PROCEDURE

OTB - ( ) - ( ) - ( )

- Design NO.
- Pitch
- Pin Count
- Socket Series

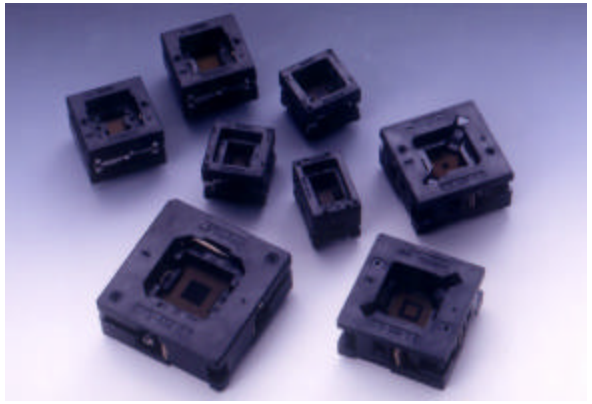

**SPECIFICATIONS**

Contact resistance: Initial 50mΩ (At 10mA)
Maximum voltage: AC700V RMS (for 1 minute)
Insulation resistance: 1,000MΩ or higher (At DC 500V)
Rated current: 1A
Operating temperature range: -60°C ~ +150°C
Terminal strength against pulling: 0.5kg (1 minute)
Insertion: Min. 10,000 times (Mechanical)

**MATERIAL**

Body: PEI, PES
Contact: BeCu, Au plating (Ni-base)

# APPLICABLE IC DIMENSIONS & SOCKET DIMENSIONS

## OTB-484 SERIES (0.8mm PITCH)

Unit: mm

| PART NO. | APPLICABLE IC DIMENSIONS (REF.) | | | | | OUTSIDE DIMENSIONS (REF.) | | | | REMARKS |
|---|---|---|---|---|---|---|---|---|---|---|
| | BODY SIZE | GRID | ROW/ARRAY | LEADS NUMBER | PITCH | A | B | C | D | |
| OTB-257(484)-0.8-15 | 16X16 | 19X19 | Depopulated | 257 | 0.8 | 48 | 48 | 19 | 2.9 | |
| OTB-280(484)-0.8-23 | 16X16 | 19X19 | P.5 Row | 280 | 0.8 | 48 | 48 | 19 | 2.9 | |
| OTB-288(484)-0.8-05 | 16X16 | 19X19 | Depopulated | 288 | 0.8 | 48 | 48 | 19 | 2.9 | |
| OTB-332(484)-0.8-03 | 17X17 | 19X19 | P.7 Row | 332 | 0.8 | 48 | 48 | 19 | 2.9 | |
| OTB-216(484)-0.8-01 | 18X18 | 21X21 | P.3 Row | 216 | 0.8 | 48 | 48 | 19 | 2.9 | |
| OTB-384(484)-0.8-04 | 18X18 | 22X22 | P.6 Row | 384 | 0.8 | 48 | 48 | 19 | 2.9 | |
| OTB-400(484)-0.8-22 | 17X17 | 20X20 | Fully Array | 400 | 0.8 | 48 | 48 | 19 | 2.3 | |
| OTB-480(484)-0.8-18 | 19X19 | 22X22 | P.10 Row | 480 | 0.8 | 48 | 48 | 19 | 2.3 | |
| OTB-156(484)-0.8-16 | 14X14 | 16X16 | P.3 Row | 156 | 0.8 | 48 | 48 | 19 | 2.9 | |
| OTB-256(484)-0.8-09 | 17X17 | 20X20 | P.4 Row | 256 | 0.8 | 48 | 48 | 19 | 2.9 | |
| OTB-336(484)-0.8-09 | 17X17 | 20X20 | P.6 Row | 336 | 0.8 | 48 | 48 | 19 | 2.9 | |
| OTB-216(484)-0.8-01 | 18X18 | 21X21 | P.3 Row | 216 | 0.8 | 48 | 48 | 19 | 2.9 | |

– Depopulated version available.

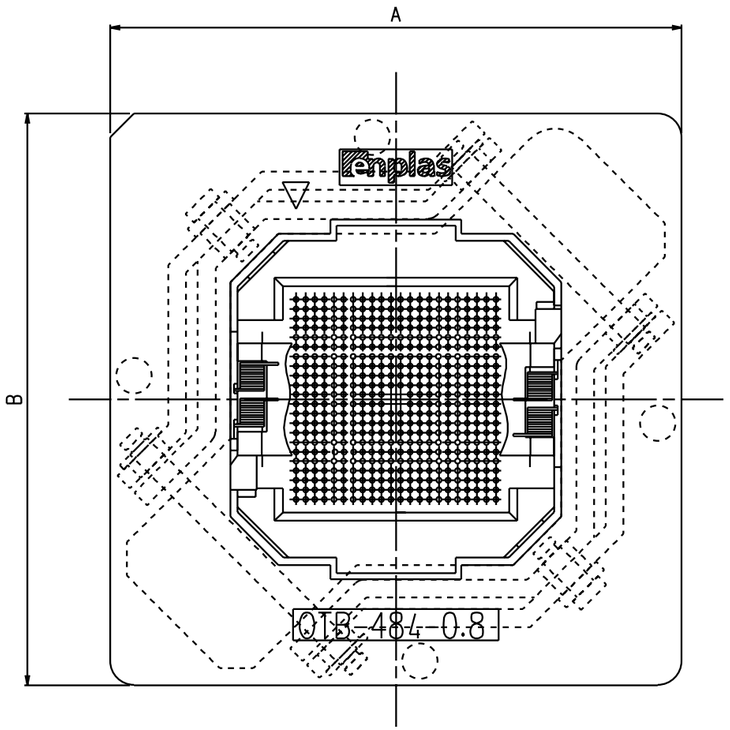


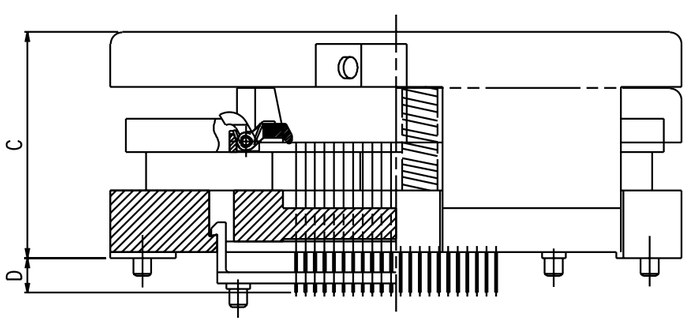


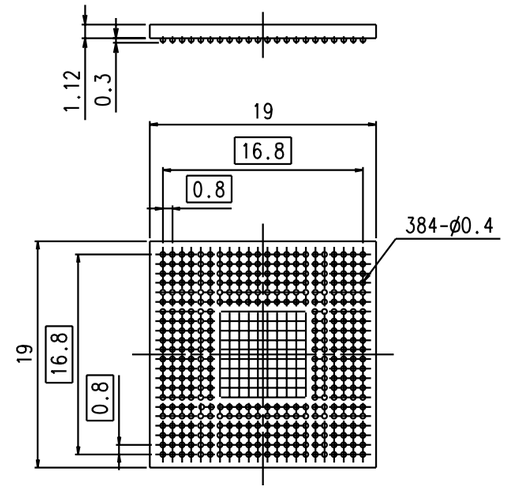


MATCHING DEVICE
(REFERENCE ONLY)

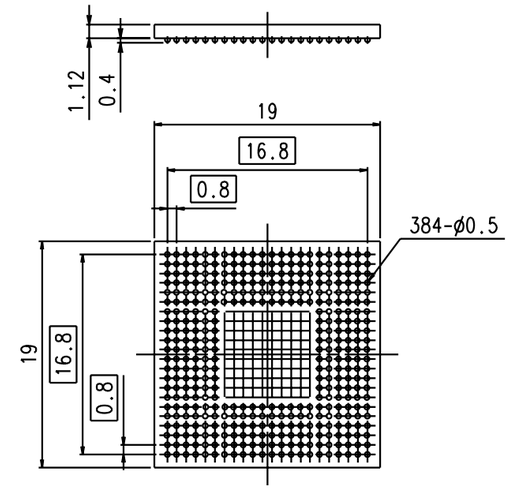


MATCHING DEVICE
(REFERENCE ONLY)

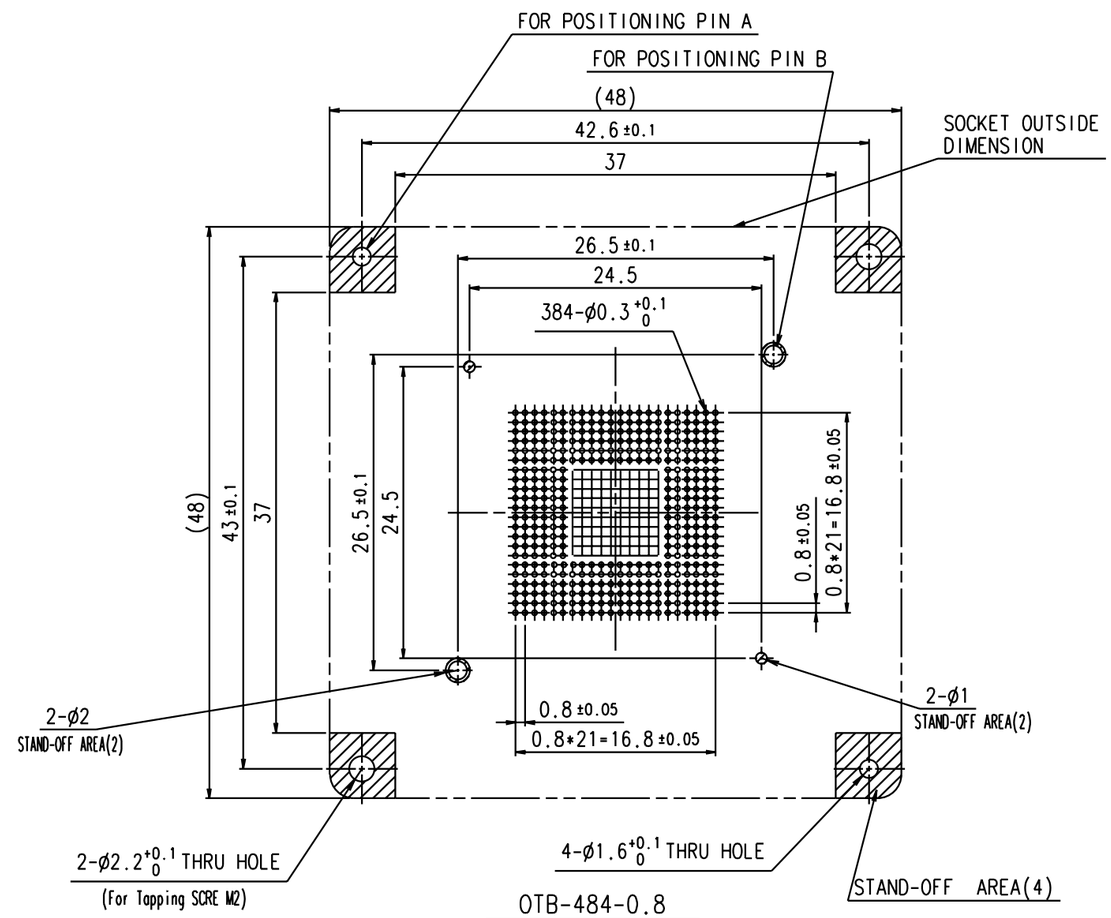


OTB-484-0.8
(REFERENCE ONLY)