Micro BGA

BALL GRID ARRAY

Applicable IC/Micro BGA

OPEN TOP TYPE SOCKETS

ORDERING PROCEDURE

OTB - ( ) - ( ) - ( )

- Socket Series
- Pin Count
- Pitch
- Design NO.

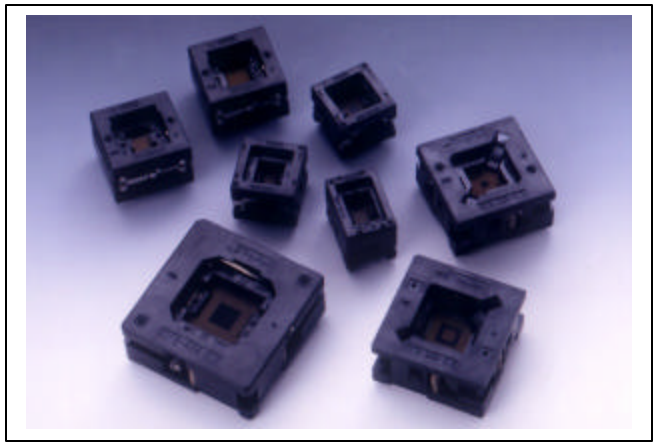

SPECIFICATIONS

Contact resistance: Initial 50mΩ (At 10mA)
Maximum voltage: AC700V RMS (for 1 minute)
Insulation resistance: 1,000MΩ or higher (At DC 500V)
Rated current: 1A
Operating temperature range: -60°C ~ +150°C
Terminal strength against pulling: 0.5kg (1 minute)
Insertion: Min. 10,000 times (Mechanical)

MATERIAL

Body: PEI, PES
Contact: BeCu, Au plating (Ni-base)

APPLICABLE IC DIMENSIONS & SOCKET DIMENSIONS

OTB-289 SERIES (0.8mm PITCH)

Unit: mm

PART NO.	APPLICABLE IC DIMENSIONS (REF.)					OUTSIDE DIMENSIONS (REF.)				REMARKS
	BODY SIZE	GRID	ROW/ARRAY	LEADS NUMBER	PITCH	A	B	C	D	
OTB-176(289)-0.8-06	13X13	15X15	P.4 Row	176	0.8	38	38	18.2	2.9	
OTB-224(289)-0.8-04	13X13	15X15	Fully Array	224	0.8	38	38	18.2	2.9	
OTB-208(289)-0.8-02	15X15	17X17	P.4 Row	208	0.8	38	38	18.2	2.9	
OTB-169(289)-0.8-14	15X15	13X13	Fully Array	169	0.8	38	38	18.2	2.9	
OTB-225(289)-0.8-03	15X15	15X15	Fully Array	225	0.8	38	38	18.2	2.9	
OTB-233(289)-0.8-15	15X15	17X17	Depopulated	233	0.8	38	38	18.2	2.9	
OTB-240(289)-0.8-11	15X15	17X17	P.5 Row	240	0.8	38	38	18.2	2.9	

– Depopulated version available.

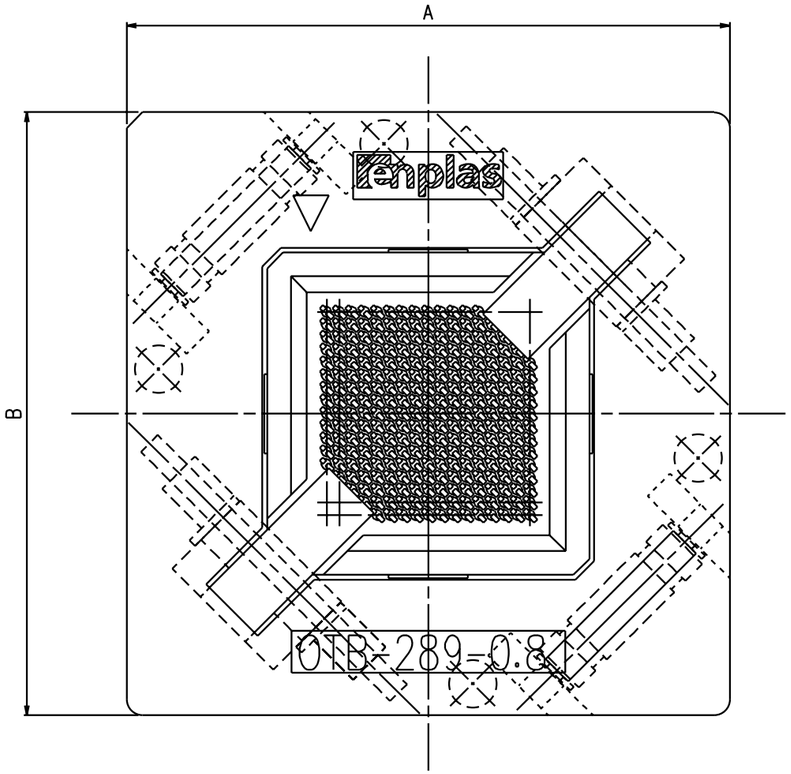

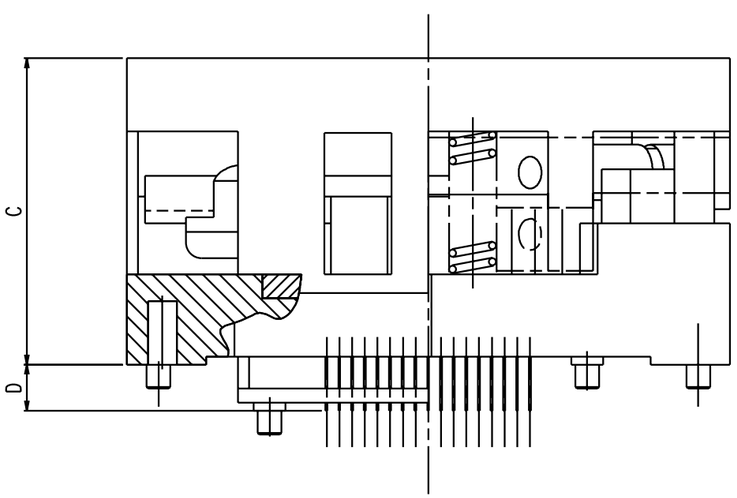

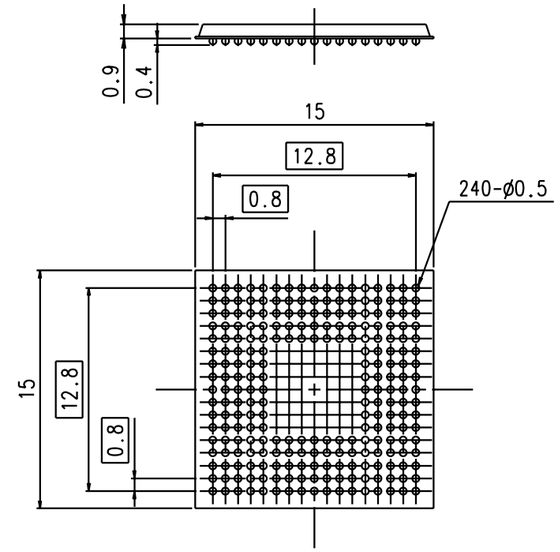

MATCHING DEVICE
(REFERENCE ONLY)

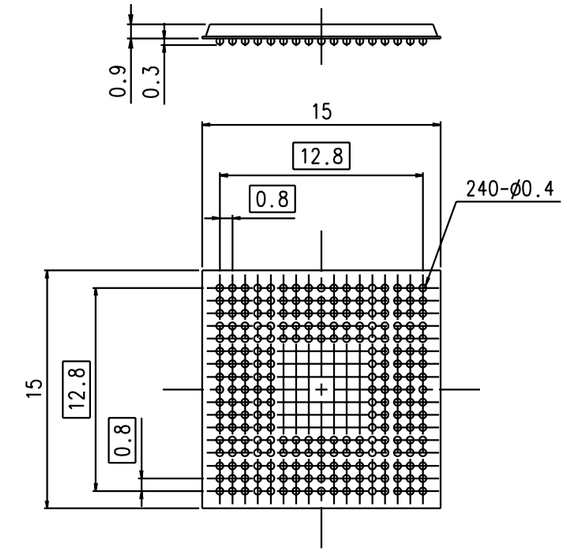

MATCHING DEVICE
(REFERENCE ONLY)

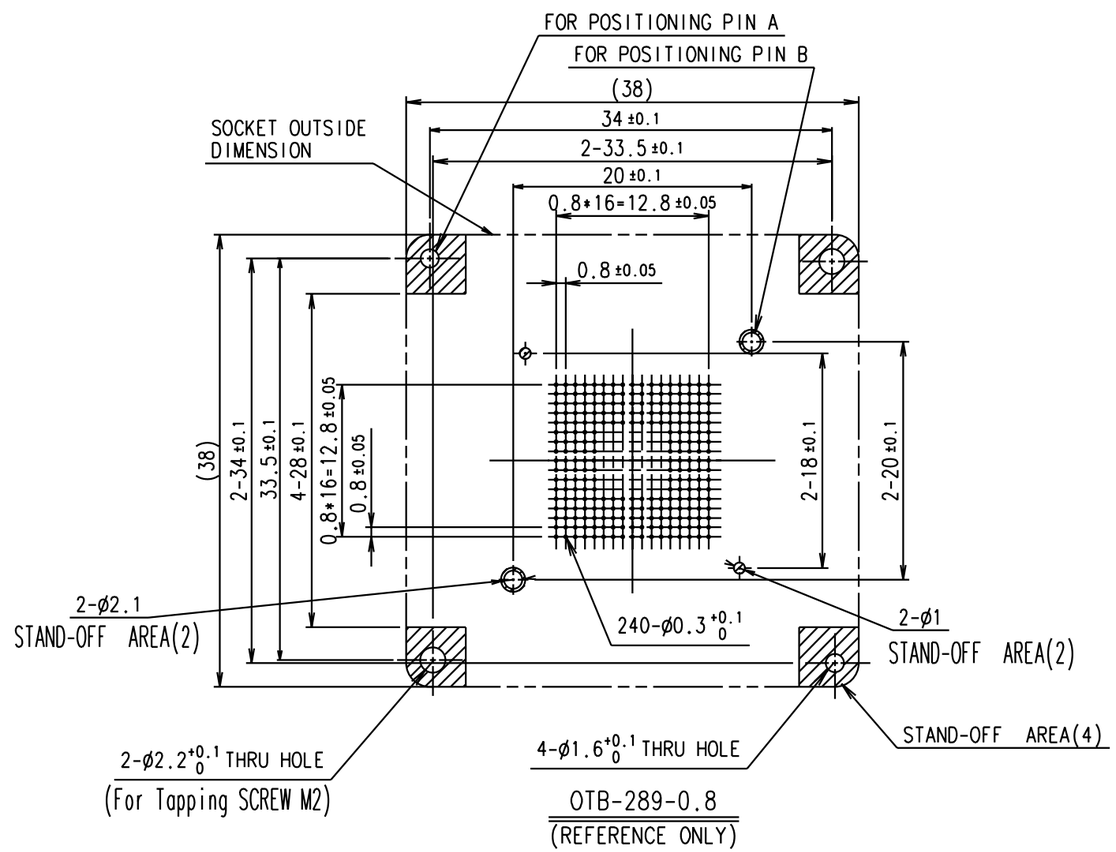

OTB-289-0.8
(REFERENCE ONLY)