Micro BGA

BALL GRID ARRAY

Applicable IC/Micro BGA

OPEN TOP TYPE SOCKETS

ORDERING PROCEDURE

OTB - ( ) - ( ) - ( )

- Design NO.
- Pitch
- Pin Count
- Socket Series

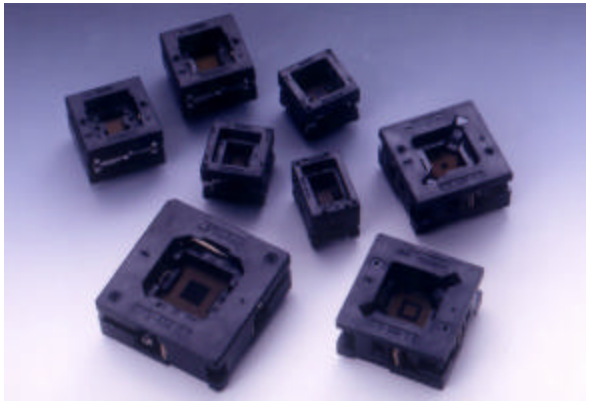

SPECIFICATIONS

Contact resistance: Initial 50mΩ (At 10mA)
Maximum voltage: AC700V RMS (for 1 minute)
Insulation resistance: 1,000MΩ or higher (At DC 500V)
Rated current: 1A
Operating temperature range: -60°C ~ +150°C
Terminal strength against pulling: 0.5kg (1 minute)
Insertion: Min. 10,000 times (Mechanical)

MATERIAL

Body: PEI, PES
Contact: BeCu, Au plating (Ni-base)

APPLICABLE IC DIMENSIONS & SOCKET DIMENSIONS

OTB-256 SERIES (0.8mm PITCH)

Unit: mm

PART NO.	APPLICABLE IC DIMENSIONS (REF.)					OUTSIDE DIMENSIONS (REF.)				REMARKS
	BODY SIZE	GRID	ROW/ARRAY	LEADS NUMBER	PITCH	A	B	C	D	
OTB-65(256)-0.8-09	8X8	8X8	Fully Array	64	0.8	28	28	18.5	2.5	
OTB-81(256)-0.8-06	8X8	9X9	Fully Array	81	0.8	28	28	18.5	2.5	
OTB-81(256)-0.8-07	9X9	9X9	Fully Array	81	0.8	28	28	18.5	2.5	
OTB-80(256)-0.8-19	9X9	10X10	P.2 ROW	80	0.8	28	28	18.5	2.5	
OTB-96(256)-0.8-22	9X11	10X12	Depopulated	96	0.8	28	28	18.5	2.5	
OTB-100(256)-0.8-13	10X10	10X10	Fully Array	100	0.8	28	28	18.5	2.5	
OTB-121(256)-0.8-17	10X10	11X11	Fully Array	121	0.8	28	28	18.5	2.5	
OTB-144(256)-0.8-13	10X10	12X12	Fully Array	144	0.8	28	28	18.5	2.5	
OTB-100(256)-0.8-10	11X11	11X11	Depopulated	100	0.8	28	28	18.5	2.5	
OTB-169(256)-0.8-14	11X11	13X13	Fully Array	169	0.8	28	28	18.5	2.5	
OTB-145(256)-0.8-12	12X12	13X13	Depopulated	145	0.8	28	28	18.5	2.5	
OTB-179(256)-0.8-03	12X12	14X14	P.5 ROW	179	0.8	28	28	18.5	2.5	
OTB-180(256)-0.8-28	12X12	14X14	P.5 ROW	180	0.8	28	28	18.5	2.5	
OTB-181(256)-0.8-05	13X13	14X14	P.5 ROW	181	0.8	28	28	18.5	2.5	
OTB-200(256)-0.8-08	13X13	15X15	P.5 ROW	200	0.8	28	28	18.5	2.5	
OTB-225(256)-0.8-16	13X13	15X15	Fully Array	225	0.8	28	28	18.5	2.5	
OTB-192(256)-0.8-29	14X14	16X16	P.4 ROW	192	0.8	28	28	18.5	2.5	
OTB-232(256)-0.8-18	14X14	16X16	P.6 ROW	232	0.8	28	28	18.5	2.5	

– Depopulated version available.

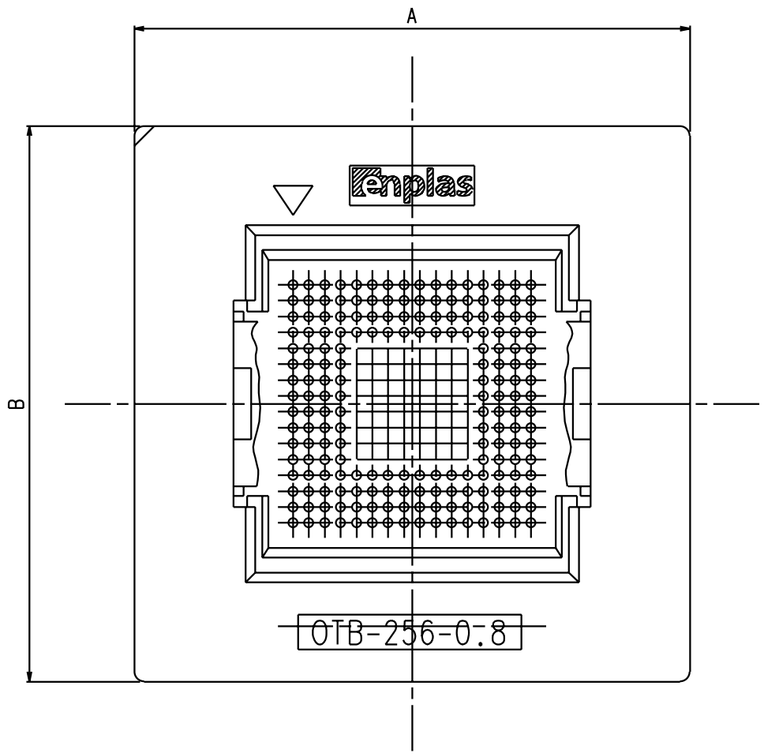

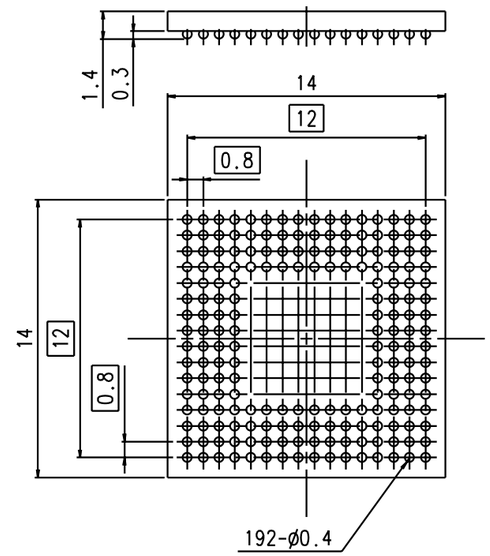

MATCHING DEVICE
(REFERENCE ONLY)

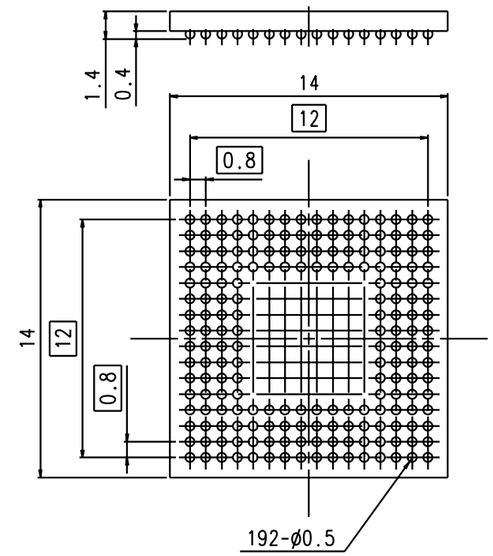

MATCHING DEVICE
(REFERENCE ONLY)

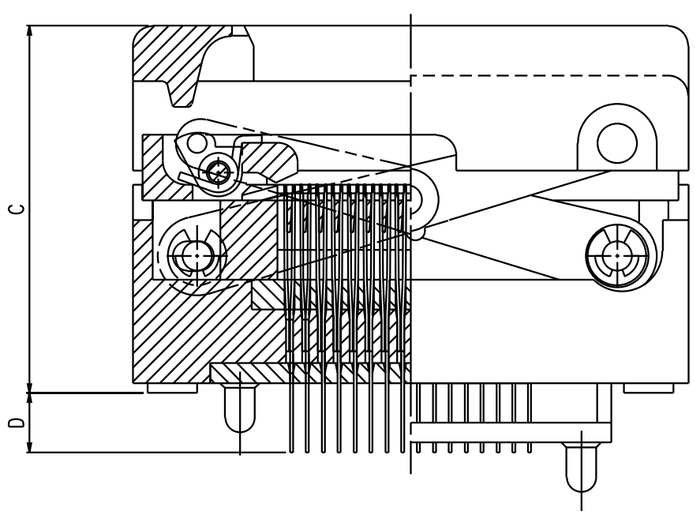

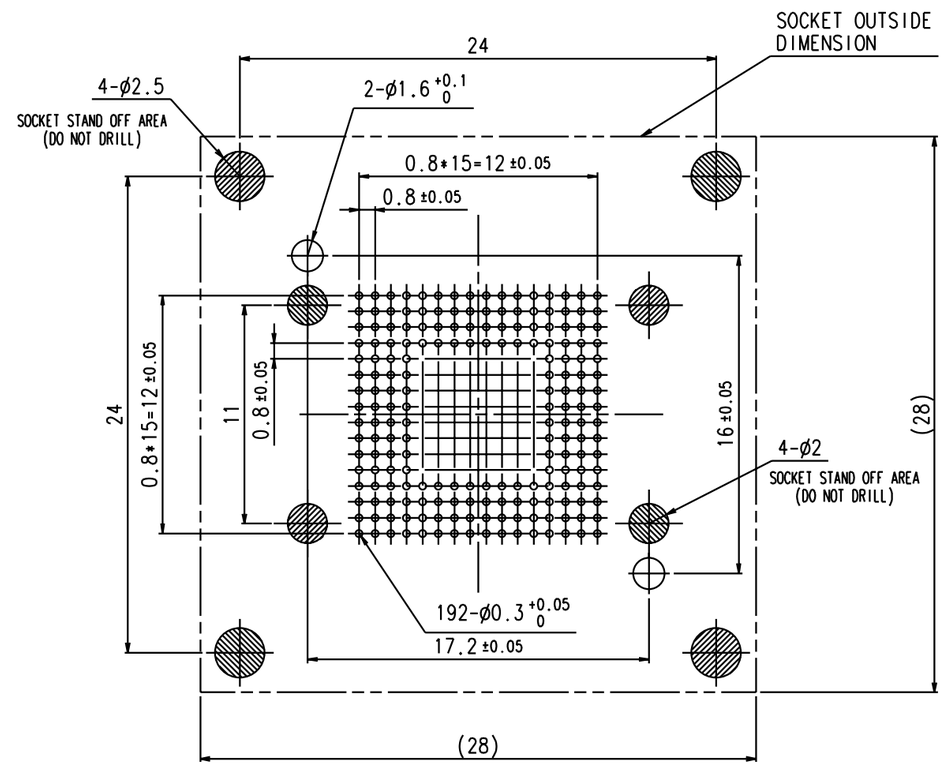

OTB-256-0.8
(REFERENCE ONLY)