CSP

CHIP SIZE PACKAGE

Applicable IC/CSP

Open Top Surface Mount Type Micro Coil Spring Socket

ORDERING PROCEDURE

OTB/OTL -( ) - ( ) - ( )

- Socket Series
- Pin Count
- Pitch
- Design NO.

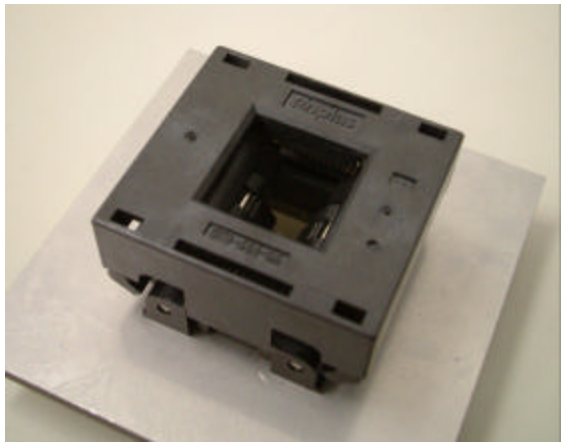

SPECIFICATIONS

Contact resistance: Initial 500mΩ (At 10mA)
Maximum voltage: AC300V RMS (for 1 minute)
Insulation resistance: 1,000MΩ or higher (At DC 500V)
Rated current: 0.5A
Insertion: Min. 10,000 cycle (Mechanical)

MATERIAL

Body: PEI, PES
Contact: BeCu, Au plating (Ni-base)

APPLICABLE IC DIMENSIONS & SOCKET DIMENSIONS

OTB-784 SERIES (0.5mm PITCH)

Unit: mm

PART NO.	APPLICABLE IC DIMENSIONS (REF.)					OUTSIDE DIMENSIONS (REF.)			REMARKS
	BODY SIZE	GRID	ROW/ARRAY	LEADS NUMBER	PITCH	A	B	C	
OTB-356(784)-0.5-01	13X13	24X24	Depopulated	356	0.5	40	40	18.9	

? Max. 16X16mm Package can be accommodated

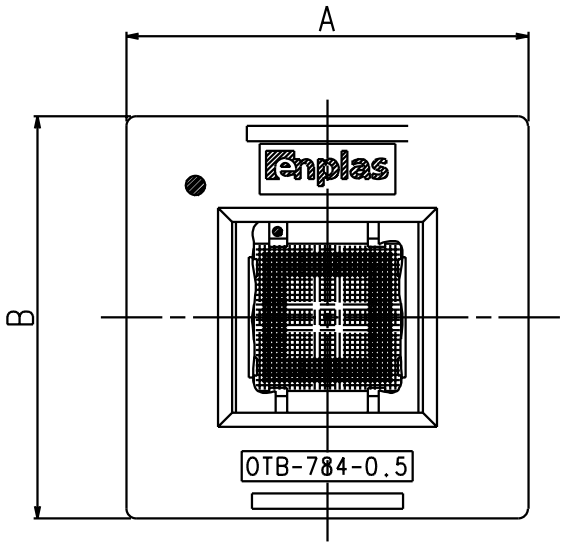

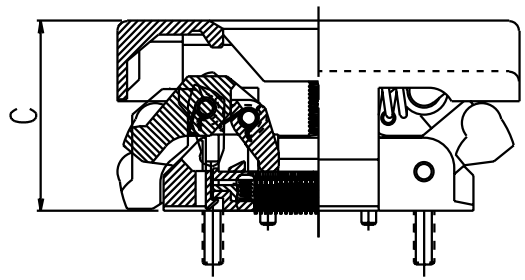

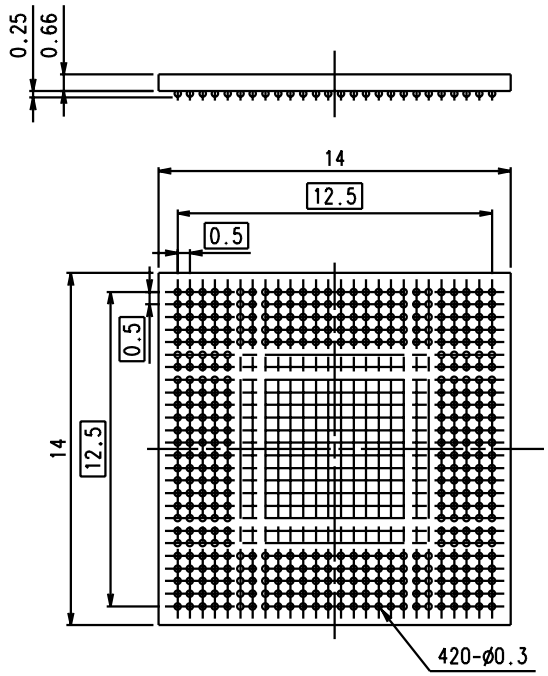

MATCHING DEVICE
(REFERENCE ONLY)

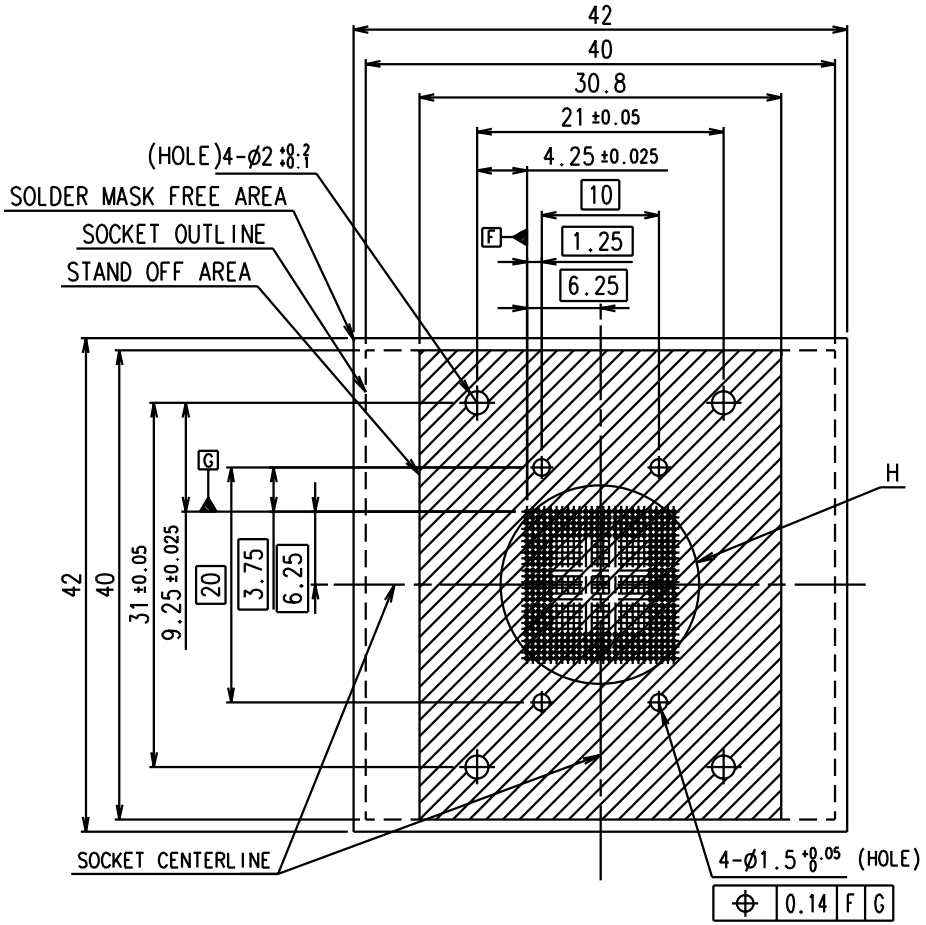

PCB PATTERN(TOP VIEW)

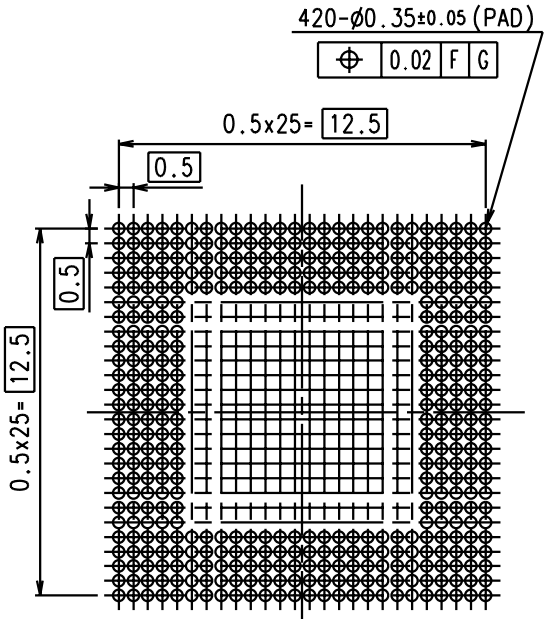

DETAIL OF H(S=5:1)

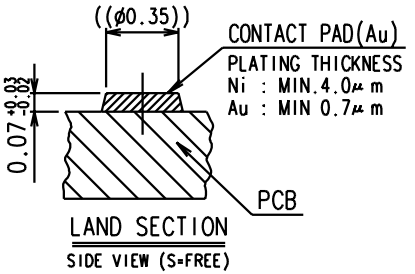

LAND SECTION

SIDE VIEW (S=FREE)

OTB-420(784)-0.5

(REFERENCE ONLY)