BGA/LGA

BALL/LAND GRID ARRAY

Applicable IC/BGA

OPEN TOP TYPE SOCKETS

ORDERING PROCEDURE

OTB - ( ) - ( ) - ( )

- Design NO.
- Pitch
- Pin Count
- Socket Series

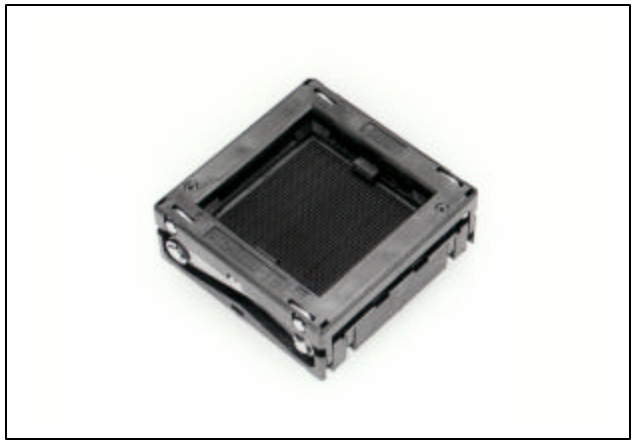

SPECIFICATIONS

Contact resistance: Initial 50mΩ (At 10mA)
Maximum voltage: AC700V RMS (for 1 minute)
Insulation resistance: 1,000MΩ or higher (At DC 500V)
Rated current: 1A
Operating temperature range: -60°C ~ +150°C
Terminal strength against pulling: 0.5kg (1 minute)
Insertion: Min. 10,000 times (Mechanical)

MATERIAL

Body: PEI, PES
Contact: BeCu, Au plating (Ni-base)

APPLICABLE IC DIMENSIONS & SOCKET DIMENSIONS

OTB-676 SERIES (1.0mm PITCH)

Unit: mm

PART NO.	APPLICABLE IC DIMENSIONS (REF.)					OUTSIDE DIMENSIONS (REF.)				REMARKS
	BODY SIZE	GRID	ROW/ARRAY	LEADS NUMBER	PITCH	A	B	C	D	
OTB-324(676)-1.0-03	23X23	22X22	Depopulated	324	1.0	63	54	22	3.2	PBGA
OTB-676-1.0-01	27x27	26x26	Fully Array	676	1.0	63	54	22	3.2	PBGA
OTB-240(676)-1.0-08	19X19	18X18	Depopulated	240	1.0	63	54	22	3.2	PBGA
OTB-300(676)-1.0-11	21X21	20X20	Depopulated	300	1.0	63	54	22	3.2	PBGA
OTB-484(676)-1.0-10	31X31	26X26	Depopulated	484	1.0	63	54	22	3.2	PBGA
OTB-484(676)-1.0-02	31X31	26x26	Depopulated	484	1.0	63	54	22	3.2	PBGA

– Depopulated version available.

– P=PERIPHERAL

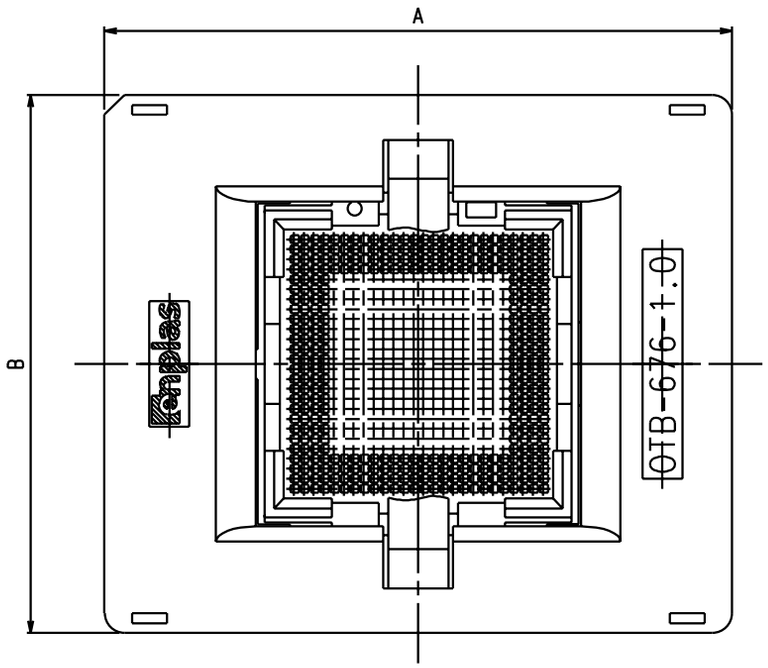

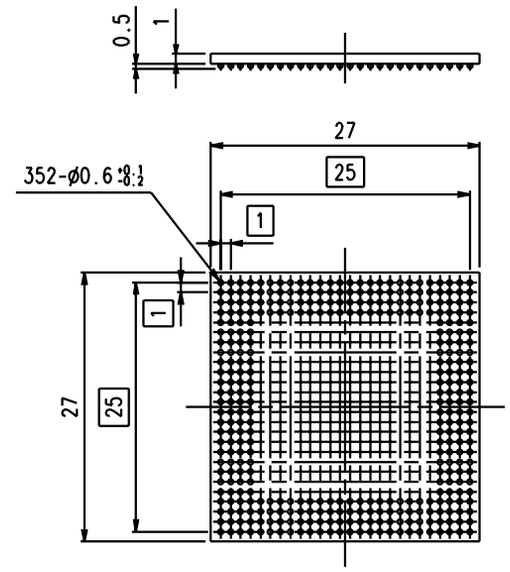

MATCHING DEVICE
(REFERENCE ONLY)

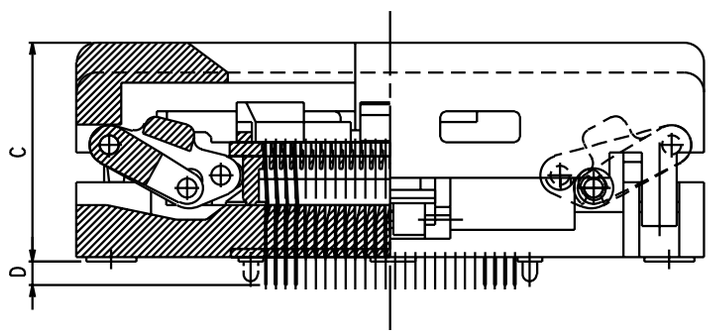

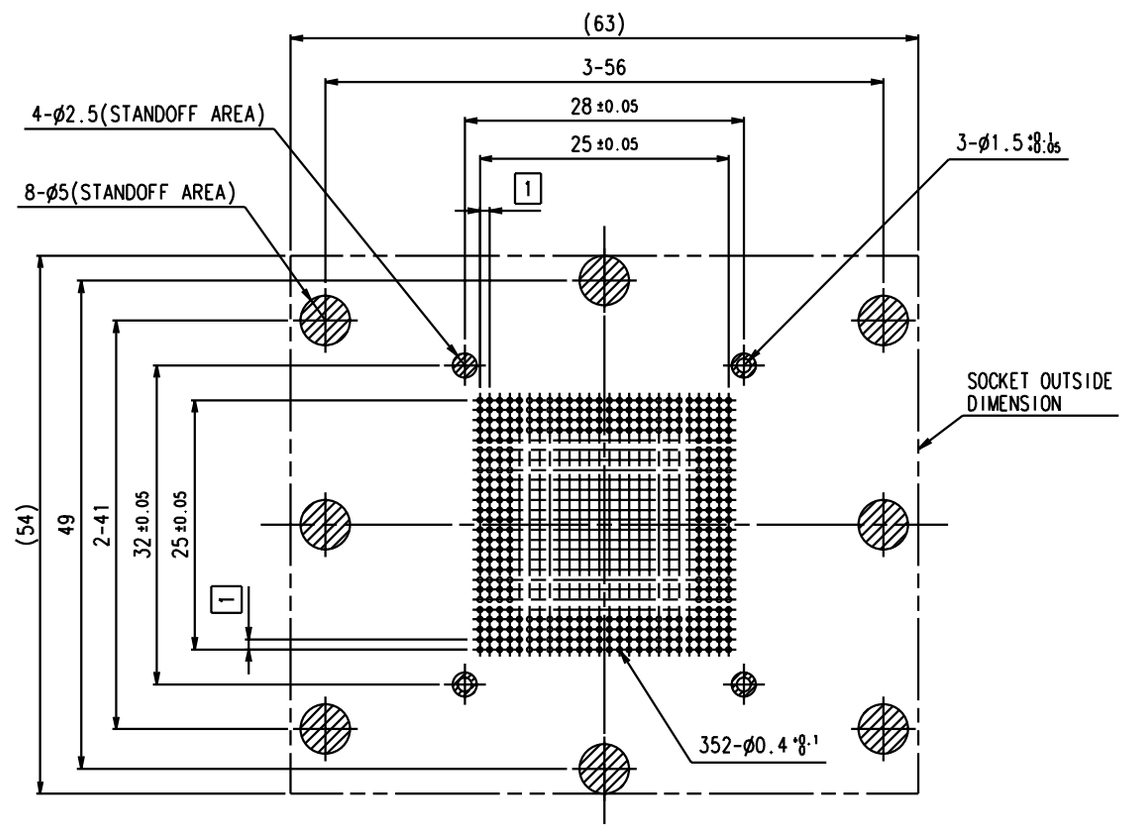

P.C.B.PATTERN
OTB-352(676)-1.0 (REFERENCE ONLY)