BGA/LGA

BALL/LAND GRID ARRAY

Applicable IC/BGA

OPEN TOP TYPE SOCKETS

ORDERING PROCEDURE

OTB - ( ) - ( ) - ( )

- Socket Series
- Pin Count
- Pitch
- Design NO.

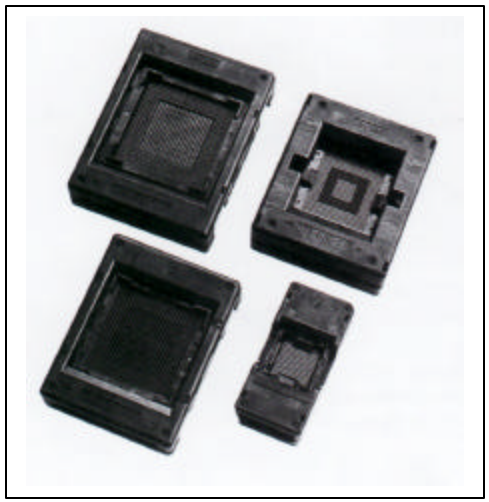

SPECIFICATIONS

Contact resistance: Initial 50mΩ (At 10mA)
Maximum voltage: AC700V RMS (for 1 minute)
Insulation resistance: 1,000MΩ or higher (At DC 500V)
Rated current: 1A
Operating temperature range: -60°C ~ +150°C
Terminal strength against pulling: 0.5kg (1 minute)
Insertion: Min. 10,000 times (Mechanical)

MATERIAL

Body: PEI, PES
Contact: BeCu, Au plating (Ni-base)

APPLICABLE IC DIMENSIONS & SOCKET DIMENSIONS

OTB-400 SERIES (1.27mm PITCH)

Unit: mm

PART NO.	APPLICABLE IC DIMENSIONS (REF.)					OUTSIDE DIMENSIONS (REF.)				REMARKS
	BODY SIZE	GRID	ROW/ARRAY	LEADS NUMBER	PITCH	A	B	C	D	
OTB-169(400)-1.27-13	17X17	13X13	Fully Array	169	1.27	60	45	18	4	PBGA
OTB-252(400)-1.27-02	21X21	16X16	Fully Array	252	1.27	60	45	18	4	PBGA
OTB-255(400)-1.27-06	21X21	16X16	Fully Array	255	1.27	60	45	18	3.3	CBGA
OTB-252(400)-1.27-04	23X23	16X16	Fully Array	256	1.27	60	45	18	4	PBGA
OTB-208(400)-1.27-04	23X23	17X17	P.4 ROW	208	1.27	60	45	18	4	PBGA
OTB-360(400)-1.27-11	25X25	19X19	Fully Array	360	1.27	60	45	18	3.3	CBGA
OTB-292(400)-1.27-02	27X27	20X20	P.4 ROW	292	1.27	60	45	18	4	PBGA
OTB-360(400)-1.27-18	25X25	19X19	Fully Array	360	1.27	62	55	22.4	3.3	PBGA
OTB-272(400)-1.27-02	27X27	20X20	Depopulated	272	1.27	50	44	18	2.5	Shrink Without Latch
OTB-360(400)-1.27-18	25X25	19X19	Depopulated	272	1.27	50	44	18	2.5	Shrink Without Latch

– Depopulated version available.

– P=PERIPHERAL

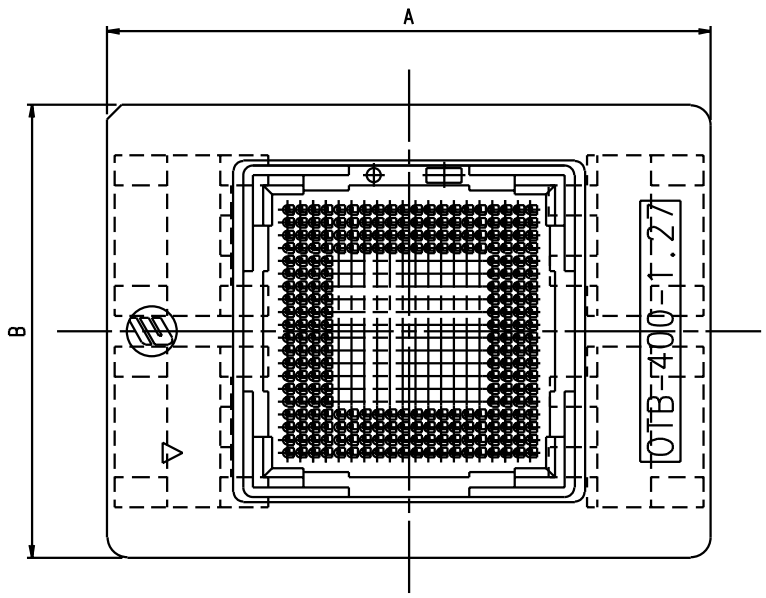

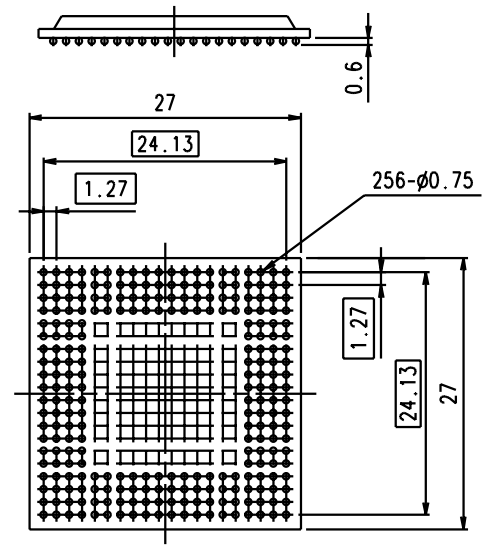

MATCHING DEVICE
(REFERENCE ONLY)

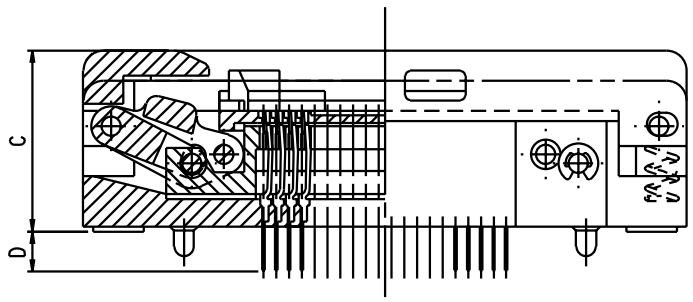

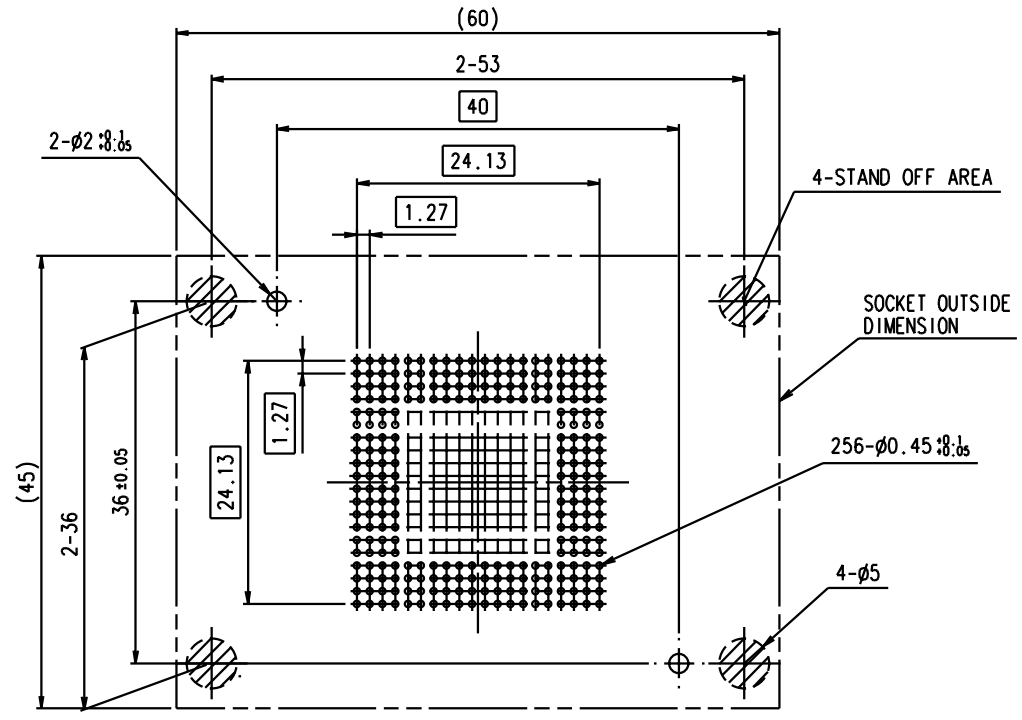

P.C.B PATTERN
OTB-256(400)-1.27 (REFERENCE ONLY)